OPEN Industry Standard, Flexible Architecture

GREEN Less Heat, Less Power Consumption

STABLE Robust Design, Quality Parts

Stable and
Reliable Solution

Server/Workstation
Motherboard

4UXGM-GNR2 CX8

User Manual

English

Version 1.00
Published Jun. 2026
Copyright © 2026 ASRock Rack Inc. All rights reserved.

Copyright Notice:

No part of this documentation may be reproduced, transcribed, transmitted, or translated in any language, in any form or by any means, except duplication of documentation by the purchaser for backup purpose, without written consent of ASRock Rack Inc.

Products and corporate names appearing in this documentation may or may not be registered trademarks or copyrights of their respective companies, and are used only for identification or explanation and to the owners' benefit, without intent to infringe.

Disclaimer:

Specifications and information contained in this documentation are furnished for informational use only and subject to change without notice, and should not be constructed as a commitment by ASRock Rack. ASRock Rack assumes no responsibility for any errors or omissions that may appear in this documentation.

With respect to the contents of this documentation, ASRock Rack does not provide warranty of any kind, either expressed or implied, including but not limited to the implied warranties or conditions of merchantability or fitness for a particular purpose.

In no event shall ASRock Rack, its directors, officers, employees, or agents be liable for any indirect, special, incidental, or consequential damages (including damages for loss of profits, loss of business, loss of data, interruption of business and the like), even if ASRock Rack has been advised of the possibility of such damages arising from any defect or error in the documentation or product.

This device complies with Part 15 of the FCC Rules. Operation is subject to the following two conditions:

(1) this device may not cause harmful interference, and
(2) this device must accept any interference received, including interference that may cause undesired operation.

CALIFORNIA, USA ONLY

The Lithium battery adopted on this server motherboard contains Perchlorate, a toxic substance controlled in Perchlorate Best Management Practices (BMP) regulations passed by the California Legislature. When you discard the Lithium battery in California, USA, please follow the related regulations in advance.
"Perchlorate Material-special handling may apply, see www.dtsc.ca.gov/hazardouswaste/perchlorate"

ASRock Rack's Website: www.ASRockRack.com

Setting up the Server in a Restricted Access Location/Restricted Access Area

- Access can only be gained by service persons or by users who have been instructed about the reasons for the restrictions applied to the location and about any precautions that shall be taken.
- Access is through the use of a tool or lock and key, or other means of security, and is controlled by the authority responsible for the location.
- Leave enough clearance (25 inches in the front and 30 inches in the back of the rack) to allow the front door to be opened completely and to allow for sufficient airflow.
- This product is for installation merely in a Restricted Access Location.
- This product is not suitable for use with visual display work place devices according to §2 of the the German Ordinance for Work with Visual Display Units.
- Only skilled person and Instructed person can remove the chassis covers to access the inside of the system.

Replaceable Batteries

CAUTION

RISK OF EXPLOSION IF BATTERY IS REPLACED BY AN INCORRECT TYPE.

DISPOSE OF USED BATTERIES ACCORDING TO THE INSTRUCTIONS

Warning

When removal of the chassis lid required for servicing:

- Turn off power and unplug any power cords/cables, and
- Reinstall the chassis lid before restoring power.

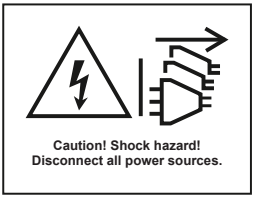

Important Safety Instructions

Pay close attention to the following safety instructions before performing any of the operation. Basic safety precautions should be followed to protect yourself from harm and the product from damage:

- Operation of the product should be carried out by suitably trained, qualified, and certified personnel only to avoid risk of injury from electrical shock or energy hazard.
- Disconnect the power cord from the wall outlet when installing or removing main system components, such as the server motherboard and power supply unit.
- Place the system on a stable and flat surface.
- Use extreme caution when working with high-voltage components.
- When handling parts, use a grounded wrist strap designed to prevent static discharge.
- Keep the area around the system clean and clutter-free.
- Keep all components and printed circuit boards (PCBs) in their antistatic bags when not in use.
- Handle a board by its edges only; do not touch its components, peripheral chips, memory modules or contacts.
- The power cord must be connected to a socket or outlet with a ground connection.

Contents

Chapter 1 Introduction **1**

1.1 Shipping Box Contents 2

1.2 Specifications 3

Chapter 2 Server System Overview **6**

2.1 System Components 6

2.2 Internal Features 7

2.3 System Front Panel 9

2.4 System Rear Panel 10

2.5 I/O Ports 11

2.6 LEDs 15

Chapter 3 Hardware Installation and Maintenance **18**

3.1 Server Top Cover 19

3.2 E1.S Drive 21

3.3 Power Supply 23

3.4 System Fan 25

3.5 GPU Card and Add-in Card 27

Chapter 4 Server Motherboard (GNR2D32MGX) **29**

4.1 Layout 29

4.2 Block Diagram 32

4.3 Installing the CPU and Heatsink (LGA 4077 Socket) 33

4.4 Installing the Memory Modules (DIMM) 39

Appendix **40**

Installing the Server in a Rack 40

Chapter 1 Introduction

Thank you for purchasing 4UXGM-GNR2 CX8, a reliable barebone system produced under ASRock Rack's consistently stringent quality control. It delivers excellent performance with robust design conforming to ASRock Rack's commitment to quality and endurance.

This guide provides the instructions of insertion and extraction of chassis components, such as chassis covers, system fans, power supplies, hard drive trays, and other main components this system supports. If the system is pre-installed a server motherboard, refer to the server motherboard user manual for the information of the server motherboard components, specifications and BIOS settings.

System	ASRock Rack Server Motherboard
4UXGM-GNR2 CX8	GNR2D32MGX

Because the hardware specifications might be updated, the content of this documentation will be subject to change without notice.

The illustrations shown in this manual are for reference purposes only and may not exactly match the model purchased.

If requiring technical support related to this system, please visit the website for specific information about the model.
http://www.asrockrack.com/support/

1.1 Shipping Box Contents

Items	Quantity
Server Barebone: 4UXGM-GNR2 CX8	1
CPU Heatsink	2
Rail Kit	1
Accessory Box - 8 GPU Brackets - 1 GPU Bracket Screw Kit - 4 Power Cords - 1 Cable Tie - 2 Screws for M.2 Sockets - 4 CPU Non-fabric Carriers (2 E2A, 2 E2B)	2

If any items are missing or appear damaged, contact the authorized dealer.

1.2 Specifications

4UXGM-GNR2 CX8	
System	
Form Factor	4U NVIDIA® MGX™
Dimensions	800 x 438 x 176.5 mm (31.5" x 17.2" x 6.9")
Support Motherboard	GNR2D32MGX
Front Panel	
Button	Power button w/ LED, Reset button, NMI button, UID button w/ LED
LED	System fault LED, HDD activity LED, LAN1/LAN2 activity LEDs
I/O Port	2 Type-A (USB 3.2 Gen1)
Drive Bay / Storage	
Front Side Drive Bay	16 Hot-swap E1.S (PCIe5.0 x4) drive bays, support 9.5 mm /15 mm width
Internal Side	1 M-key (PCIe5.0 x4), supports 2280 form factor [CPU0] 1 M-key (PCIe5.0 x2), supports 2280 form factor [CPU0]
Power Supply	
Type	3+1 CRPS
Output Watt	1200W @ 100-127Vac input 3200W @ 200-240Vac input
Efficiency	80-PLUS Titanium
AC Input	**Low-line:** 100-127Vrms, 50/60Hz **High-line:** 200-240Vrms, 50/60Hz
System Fan	
Fan	10 Hot-swap 80 x 80 mm fans
Processor System	
CPU	Supports Intel® Xeon® 6700P-series, 6500P-series, and 6700E-series processors
Socket	1+1 Socket E2 (LGA 4710)
Thermal Design Power	Up to 350W
Chipset	System on Chip

System Memory	
Supported DIMM Quantity	16+16 DIMM slots (2DPC)
Supported Type	DDR5 RDIMM DDR5 MRDIMM (1DPC only)
Max. Capacity per DIMM	**RDIMM:** 128GB **MRDIMM:** 64GB
Max. DIMM Frequency	**RDIMM:** 6400MT/s (1DPC), 5200MT/s (2DPC) **MRDIMM:** 8000MT/s (1DPC only)* *Only available for Intel® Xeon® 6500P/6700P-series processors
Voltage	1.1V
PCIe Expansion Slot	
PCIe x16	**Rear:** 8 FHFL dual-slot PCIe5.0 x16 1 FHHL PCIe5.0 x16
Ethernet	
Additional Ethernet Controller	Intel® i350: 2 RJ45 (1 GbE)
Server Management	
BMC Controller	ASPEED AST2600: IPMI2.0 with iKVM and vMedia support
Dedicated IPMI LAN	1 Realtek RTL8211F for dedicated management LAN
Graphics	
Controller	ASPEED AST2600
VRAM	DDR4 512MB

Rear I/O	
UID Button/ LED	1 UID button
Other Button/ LED	1 Power button, 1 System fault LED
Video Port	1 Mini-DisplayPort
USB 3.2 Gen1 Port	1 Type-A (USB 3.2 Gen1)
RJ45	2 RJ45 (1GbE) by Intel® i350 1 Dedicated IPMI
Other Network Connector	8 QSFP112 (400Gb/s) ports via NVIDIA® ConnectX®-8
System BIOS	
BIOS Type	AMI UEFI BIOS; 512Mb SPI Flash ROM
BIOS Feature	Plug and Play, ACPI 4.0 (and above) compliance wake-up events, SMBIOS 3.4 and above, ASRock Rack Instant Flash
Hardware Monitor	
Temperature	TEMP_MB1, TEMP_MB2, TEMP_MB3, I350 temperature sensing
Voltage	+12V, 5VSB, 12VSB, 3VSB, +3V, BAT, PVNN_CPU1, +1.8V
Environment	
Temperature	Operating temperature: 10°C ~ 30°C Non-operating temperature: -40°C ~ 70°C
Humidity	Non-operating humidity: 20% ~ 90% (non-condensing)

The functions are supported depending on the type of the server motherboard. Refer to the server motherboard manual for more information.

Chapter 2 Server System Overview

This chapter provides diagrams showing the location of important components of the server system.

2.1 System Components

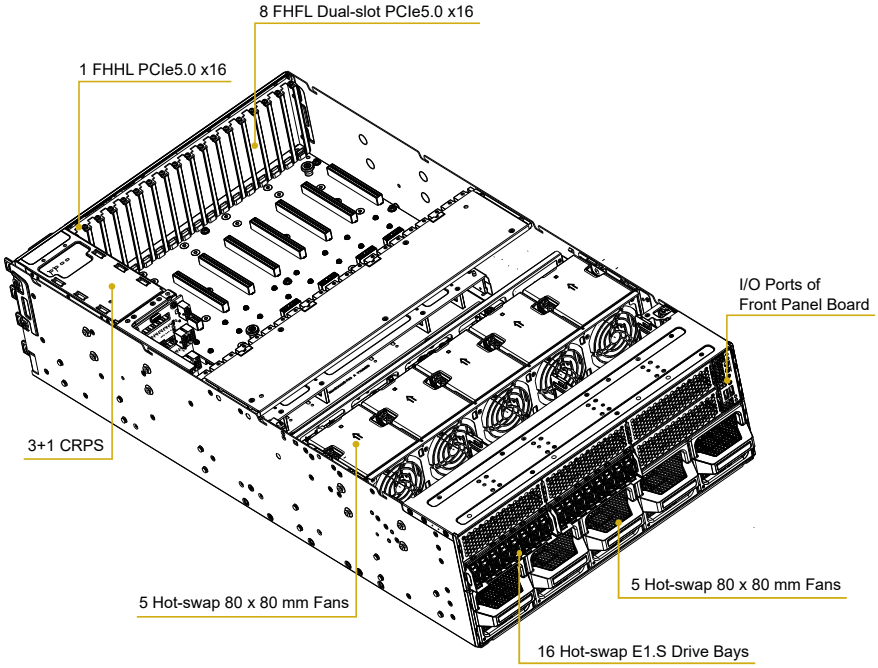

English

2.2 Internal Features

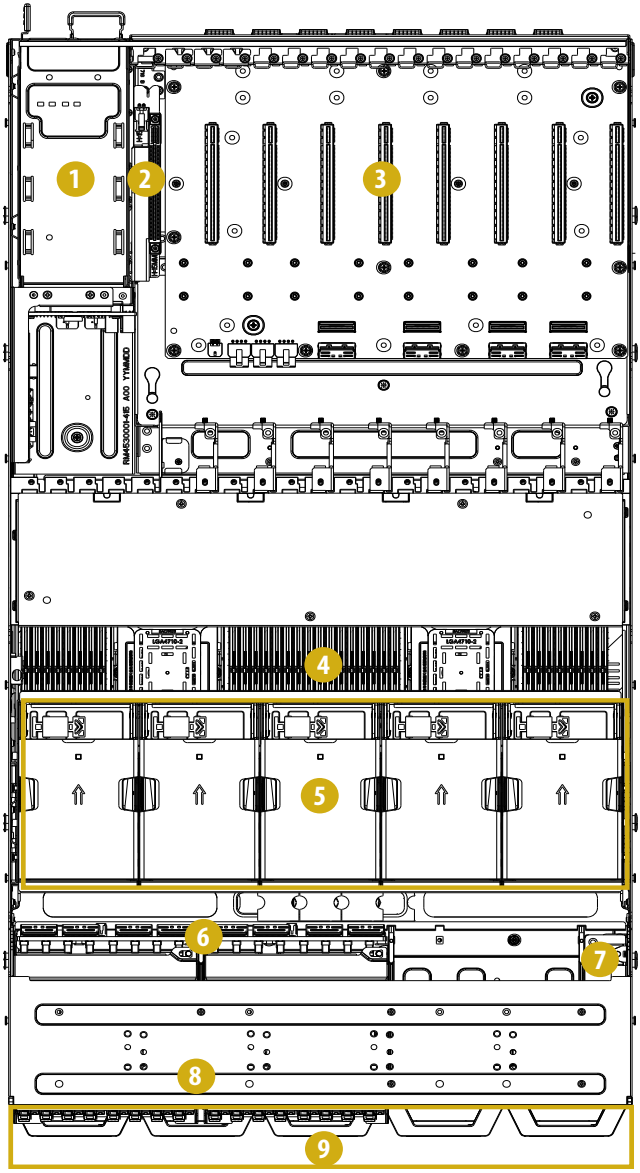

No.	Description
1	3+1 CRPS
2	1 FHHL PCIe5.0 x16 slot
3	**Top:** 8 FHFL dual-slot PCIe5.0 x16 slots **Bottom:** Switch board (4UMGX_CX8_SWB)
4	Server motherboard (GNR2D32MGX)
5	5 Hot-swap 80 x 80 mm top fans **Left-to-right:** FAN6 ~ FAN10
6	2 E1.S backplane boards (4UMGX_8E1S_G5)
7	Front panel board (4UMGX_FPB)
8	16 Hot-swap E1.S (PCIe5.0 x4) drive bays, support 9.5 mm / 15 mm width
9	5 Hot-swap 80 x 80 mm front fans **Left-to-right:** FAN1 ~ FAN5

2.3 System Front Panel

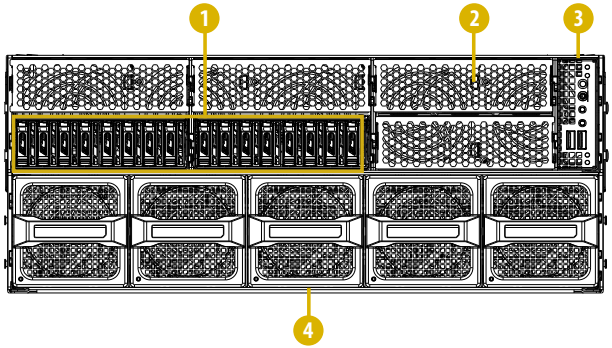

No.	Description
1	16 Hot-swap E1.S (PCIe5.0 x4) drive bays, support 9.5 mm / 15 mm width
2	Front vent
3	I/O ports of front panel board (4UMGX_FPB)
4	5 Hot-swap 80 x 80 mm front fans **Left-to-right:** FAN1 ~ FAN5

2.4 System Rear Panel

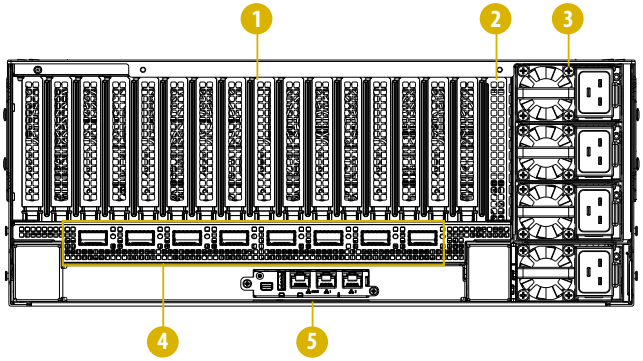

No.	Description
1	8 FHFL dual-slot PCIe5.0 x16 slots (PCIE1 ~ PCIE8)
2	1 FHHL PCIe5.0 x16 slot (PCIE9)
3	3+1 CRPS
4	8 QSFP112 (400Gb/s) ports via NVIDIA® ConnectX®-8
5	I/O ports of input/output board (4UMGX_IOB)

2.5 I/O Ports

Front Panel Board (4UMGX_FPB)

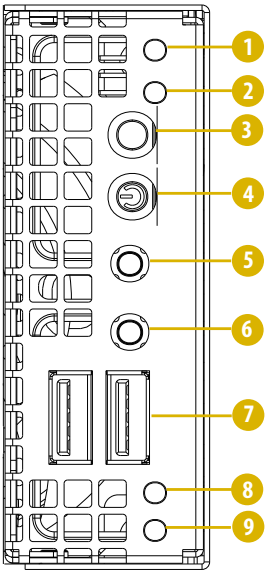

No.	Description
1	1 LAN2 activity LED
2	1 LAN1 activity LED
3	1 UID button w/ LED
4	1 Power button w/ LED
5	1 Reset button
6	1 NMI button
7	2 Type-A (USB 3.2 Gen1) ports
8	1 HDD activity LED
9	1 System fault LED

Input/Output Board (4UMGX_IOB)

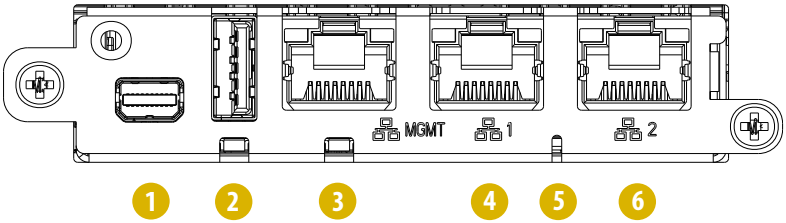

No.	Description
1	1 Mini-DisplayPort
2	**Top:** 1 Type-A (USB 3.2 Gen1) port **Bottom:** 1 Power button
3	**Top:** 1 Dedicated IPMI LAN port **Bottom:** 1 UID button
4	1 RJ45 (1 GbE) LAN port by Intel® i350 (LAN1)
5	1 System fault LED
6	1 RJ45 (1 GbE) LAN port by Intel® i350 (LAN2)

UID Button

Press the UID button to toggle the front UID LED on and off. Use the UID button to locate the server working on behind a rack of servers

1. Press and hold the UID button for 4 seconds, the BMC will trigger an external reset.
2. Press and hold the UID button for 10 seconds, the BMC will reset and load default values.

Power Button

Press the front power switch button or use the paperclip to press the rear power button to toggle the system power on and standby/sleep modes. To remove all power from the system completely, disconnect the power cord from the server.

Reset Button

When the system is completely unresponsive, press the system reset button to reboot the server without shutting it off and initialize the system.

NMI (Nonmaskable Interrupt) Button

Press the NMI button with a paper clip or pin to generate a nonmaskable interrupt and to put the server in a halt state for examination.

Status LED Definitions

LAN Activity LED	
Status	**Description**
Off	No LAN present
Amber	LAN present
Blinking Amber	Network access

UID LED	
Status	**Description**
Off	System identification is disabled.
Blue	System identification is active.

Power LED	
Status	**Description**
Off	Power off
Green	Power on

HDD Activity LED	
Status	**Description**
Off	Hard drive trays idle
Blinking Green	Hard drive trays active

System Fault LED	
Status	**Description**
Off	Running or normal operation.
Red	At least one sensor has critical alert.

Rear Dedicated IPMI LAN Port

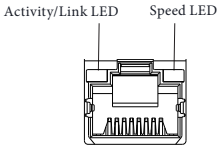

RJ45 (1 GbE) LAN Port

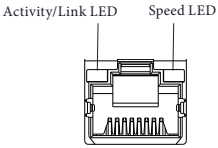

Activity/Link LED	
Status	**Description**
Off	No link
Blinking Yellow	Data activity
On	Link

Speed LED	
Status	**Description**
Off	10Mbps connection or no link
Yellow	100Mbps connection
Green	1Gbps connection

English

2.6 LEDs

PSU LED

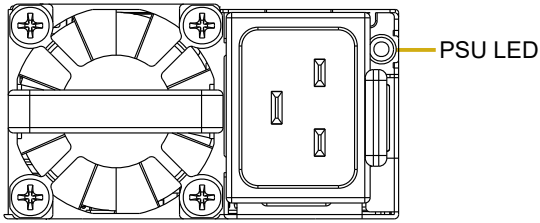

Status	Description
Off	No AC power to all power supplies
Green	Output on and ok
Blinking Green (1Hz)	- PSU standby state AC present/Only 12VSB on - Power supply is cold standby state or always standby state as defined in the Cold Redundancy section of the CRPS Common Requirements Specification
Blinking Green (2Hz)	FW updating for power supply
Amber	- AC cord unplugged, or AC power lost; with a second power supply in parallel still with AC input power. - Powr supply critical event is causing a shutdown; failure, over current, short circuit, over voltage, fan failure, over temperature
Blinking Amber (1Hz)	Power supply warning events where the power supply continues to operate; high temp, high power, high current, slow fan

Top Fan LED

The top fan LED on the top of fan is used for indicating the internal fan behavior.

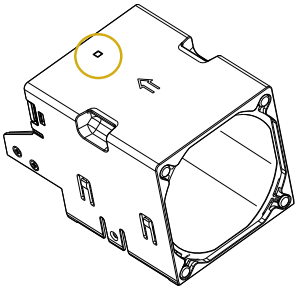

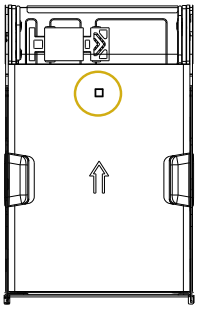

Front Fan LED

The front fan LED on the lower left of fan is used for indicating the front fan behavior.

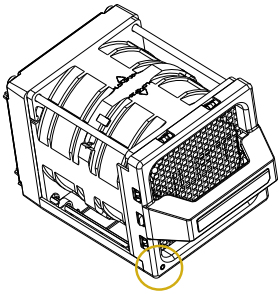

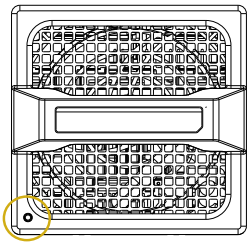

Status	Description
Off	No power
Green	Fan normal activity
Red	Fan failure

Drive Tray LED

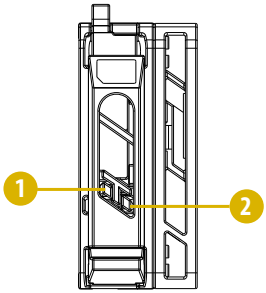

No.	Description
1	Drive tray power LED (Green)
2	Drive tray activity LED (Amber)

Chapter 3 Hardware Installation and Maintenance

This chapter helps user to assemble the chassis and install components.

Before You Begin

Before working with the server, pay close attention to the "Important Safety Instructions" at the beginning of this manual.

1. *Ensure the motherboard battery is installed before unplugging the power cord or installing/removing the motherboard.*
2. *Before installing or removing any component, ensure that the power supply is off or the power cord is detached from the power supply. Failure to do so may cause severe damage to the motherboard, peripherals, and/or components.*

1. Make sure the server is powered off.
   Power down the server if it is still running.
   (1) Press the Power button to power off the server from full-power mode to standby-power (sleep) mode. The Power LED at the front turns from solid green to blinking green.
   (2) Disconnect the power cord first from the AC outlet and then from the server.
   The power LED turns off.

The server is not completely powered down when pressing the Power button on the front panel. The Power button lets the server toggle between Power On and Standby (Sleep) modes. Some internal circuitry remain active in the Standby mode. To remove all power from the system completely, be sure to disconnect the power cord from the server.

2. Ensure having a clean and stable working environment. Avoid dust and dirt because contaminants may cause malfunctions.
3. Ground properly before touching any system component. A discharge of static electricity may damage components. Wear a grounded wrist strap if available.

1. *Some components are already pre-installed. Simply properly connect the relavant cables before or after installation.*
2. *Refer to the server motherboard user manual for instructions on how to install server motherboard components.*

English

3.1 Server Top Cover

Removing the Server Top Cover

1. *Before removing the top covers, power off the server and unplug the power cord.*
2. *The system must be operated with all the chassis top covers installed to ensure proper cooling.*

Press the tabs on the cover and push straight REAR to remove the cover from the locked position. Lift up and remove the cover.

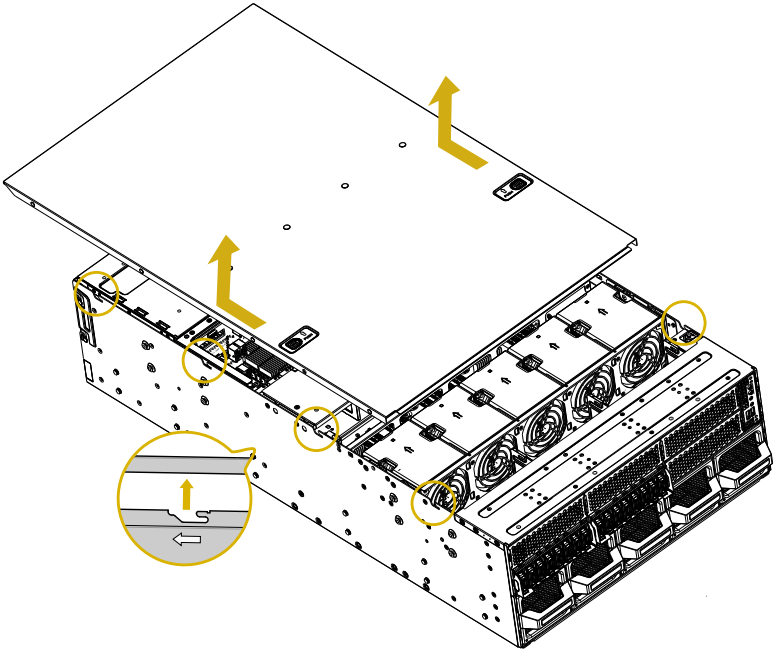

Installing the Server Top Rear Cover

Lower the top cover on the chassis, making sure the side latches align with the cutouts. Slide the cover toward the FRONT of the chassis.

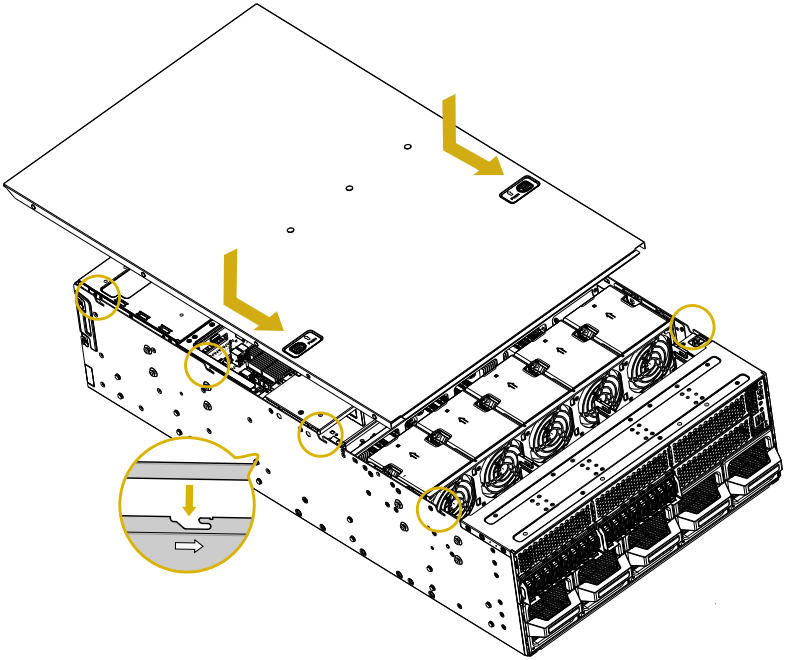

3.2 E1.S Drive

Removing Drive Tray from the Chassis

1. Press the latch on the drive tray to unlock the locking lever.
2. Pull the drive tray out.

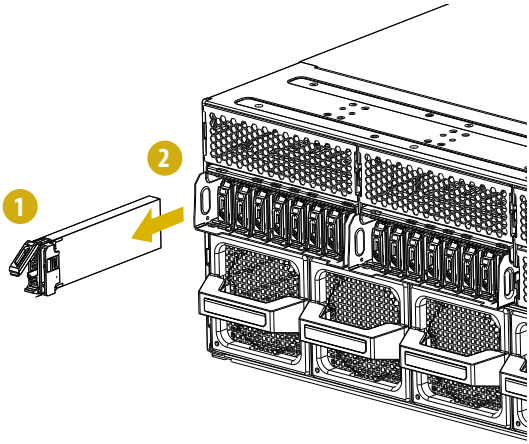

Removing the E1.S Dummy from the Drive Tray

1. Remove the screws on the drive tray.
2. Remove the dummy out.

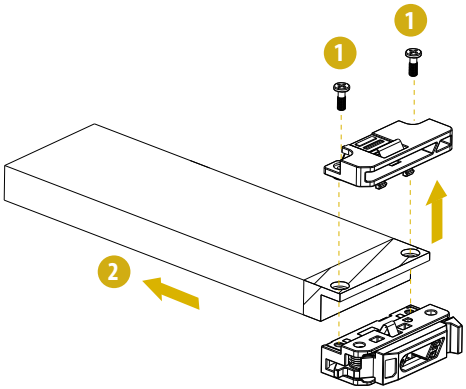

Installing the E1.S drive to the Chassis

1. Install the E1.S drive to the drive tray.
2. Secure the E1.S drive with the screws.

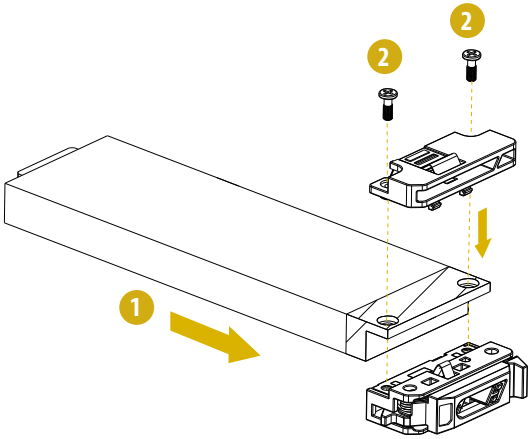

3. Slide the E1.S assembly into the drive bay until the assembly is fully seated.
4. Push in the lever to lock the assembly in place.

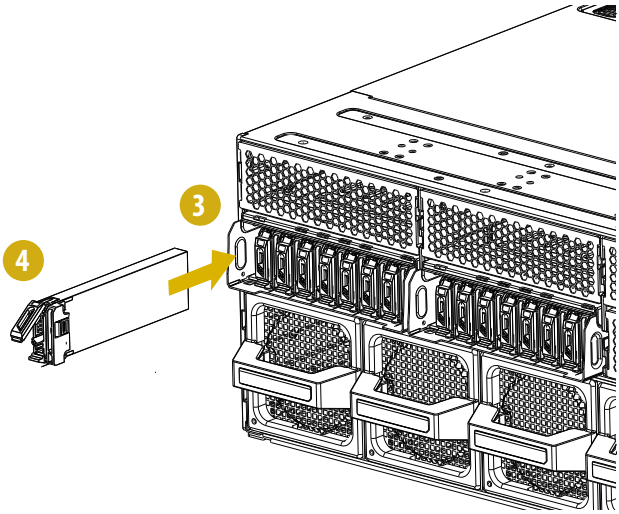

3.3 Power Supply

This system can accommodate 4 power supply units in the bay at the rear of the chassis. 3 PSUs are required for full load operation, with the fourth PSU purely as redundant, load-sharing backup. 1 PSU can be removed without affecting system operation.

> *The installation should be operated by service persons or by users who have been well trained.*

Removing the Power Supply Unit

To remove a failed power supply unit, identify the failed PSU by checking the PSU LEDs on the PSUs.

1. Hold onto the power supply handle while pressing the locking tab towards the power supply handle.
2. Pull to remove the PSU from the chassis.

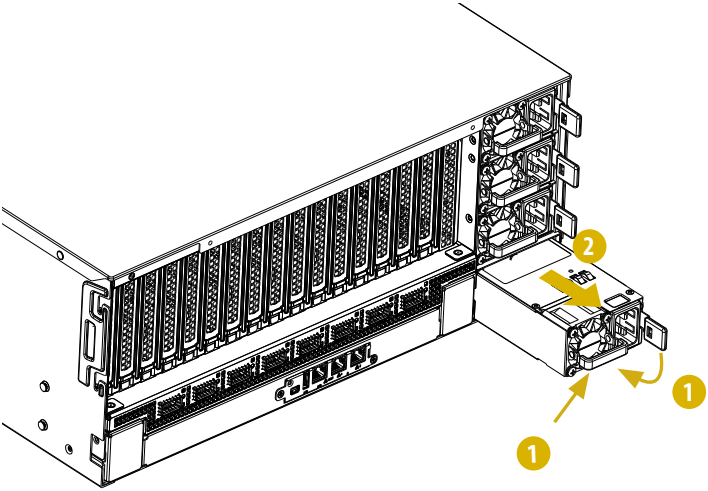

Installing the Power Supply Unit

1. Align the power supply unit with the power supply bay. Carefully slide the power supply unit all the way into the power supply bay.
2. Make sure the PSU clicks in place and is well installed.

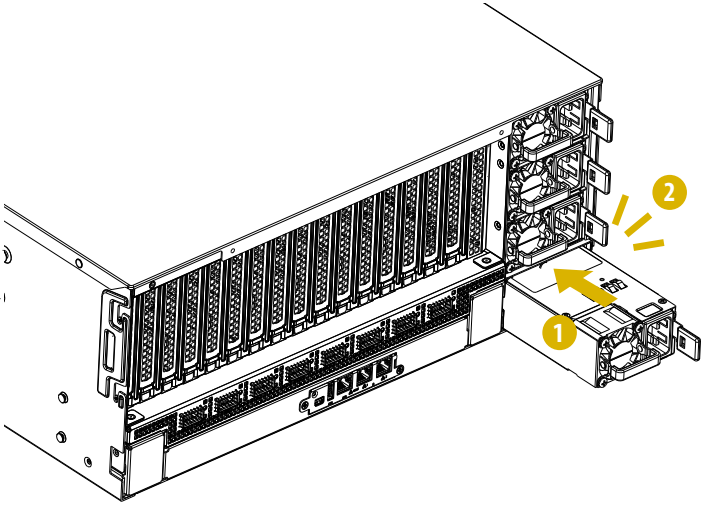

3.4 System Fan

Replacing the Top Fan

1. Lift to remove the failed fan.
2. Make sure the arrow on the fan points to the REAR of the chassis.
3. Gently place a new fan into the fan frame.
4. Make sure the fan is well seated.

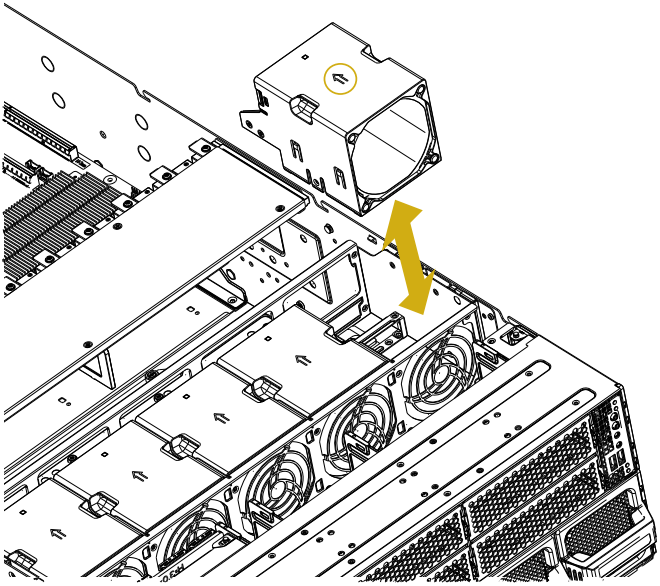

Replacing the Front Fan

1. Press and hold on the inside of handle to release the fan latch. Pull the fan out.
2. Install a new fan into the fan bay and ensure the LED appears on the lower left.
3. Make sure the fan is well seated.

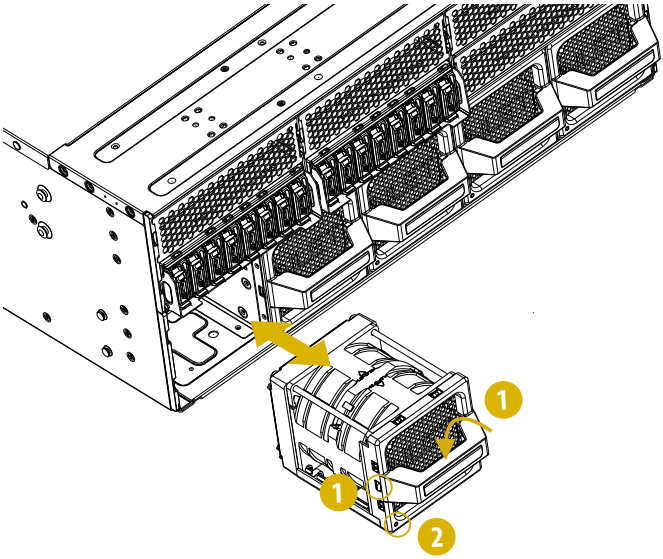

3.5 GPU Card and Add-in Card

Before replacing the GPU card or add-in card, power off the server and unplug the power cord.

Installing the GPU Card or Add-in Card

1. Remove the screw(s) securing the GPU card / add-in card to the chassis.
2. Remove the blanking plates out of the chassis.

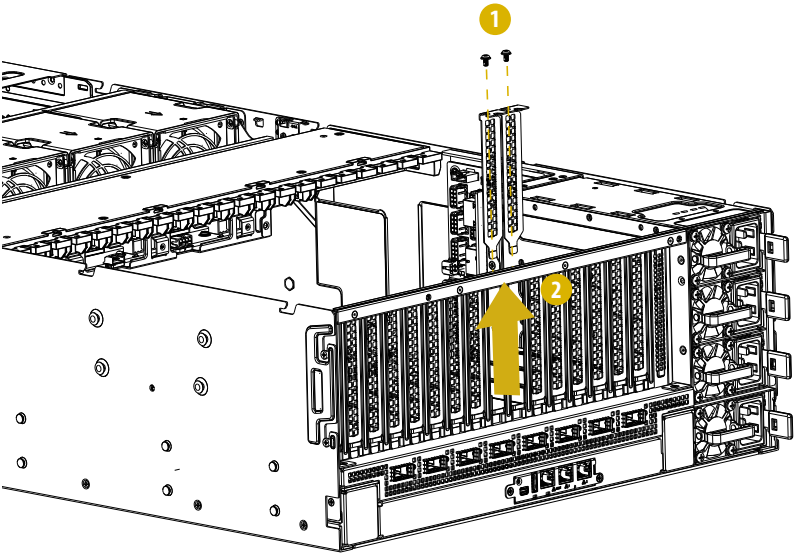

3. Remove the GPU brackets and the GPU screw kit out of the accessory box. Fasten the screws of GPU bracket to the GPU card. (Skip this step for single-length add-in card.)
4. Gently place the GPU card / add-in card into the chassis.
5. Secure the GPU card / add-in card with the screw(s).

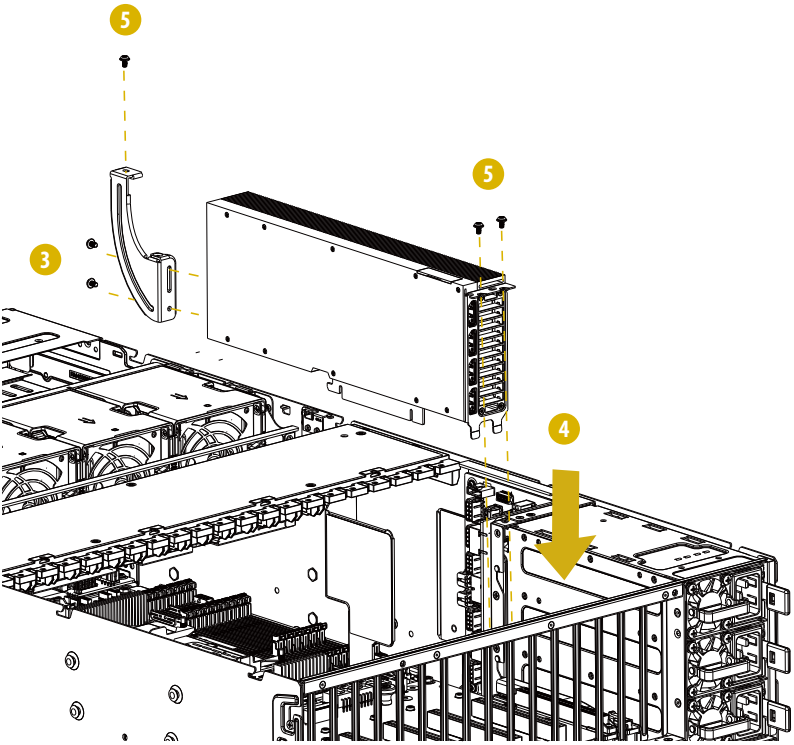

Chapter 4 Server Motherboard (GNR2D32MGX)

4.1 Layout

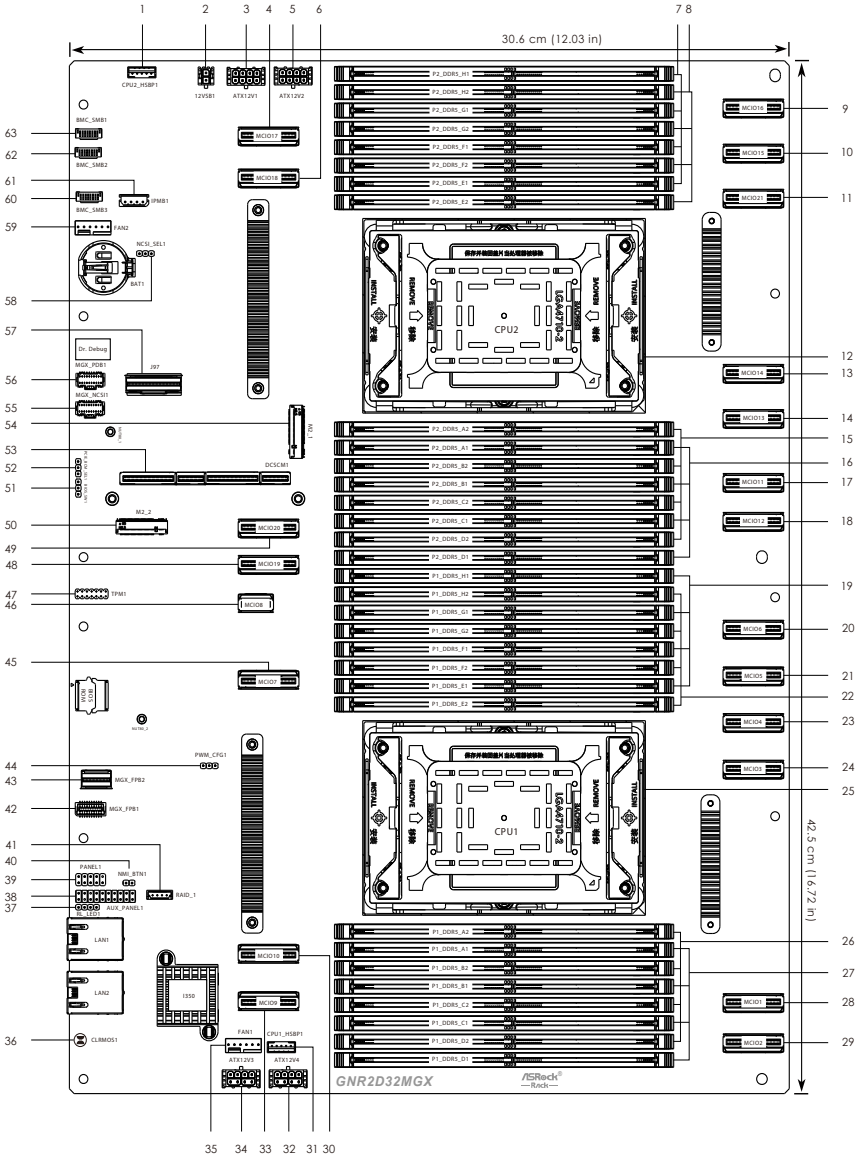

The illustration here is for references only. The actual layout may slightly vary depending on the model and the version used.

English

No.	Description
1	Backplane PCI Express Hot-Plug Connector (CPU2_HSBP1)
2	12V Micro-fit Power Connector (12VSB1)
3	ATX 12V Power Connector (ATX12V1)
4	Mini Cool Edge IO Connector (MCIO17)
5	ATX 12V Power Connector (ATX12V2)
6	Mini Cool Edge IO Connector (MCIO18)
7	4 DDR5 DIMM Slots (P2_DDR5_E1/F1/G1/H1)
8	4 DDR5 DIMM Slots (P2_DDR5_E2/F2/G2/H2)
9	Mini Cool Edge IO Connector (MCIO16)
10	Mini Cool Edge IO Connector (MCIO15)
11	Mini Cool Edge IO Connector (MCIO21)
12	Socket E2 (LGA4710) (CPU2)
13	Mini Cool Edge IO Connector (MCIO14)
14	Mini Cool Edge IO Connector (MCIO13)
15	4 DDR5 DIMM Slots (P2_DDR5_A2/B2/C2/D2)
16	4 DDR5 DIMM Slots (P2_DDR5_A1/B1/C1/D1)
17	Mini Cool Edge IO Connector (MCIO11)
18	Mini Cool Edge IO Connector (MCIO12)
19	4 DDR5 DIMM Slots (P1_DDR5_E1/F1/G1/H1)
20	Mini Cool Edge IO Connector (MCIO6)
21	Mini Cool Edge IO Connector (MCIO5)
22	4 DDR5 DIMM Slots (P1_DDR5_E2/F2/G2/H2)
23	Mini Cool Edge IO Connector (MCIO4)
24	Mini Cool Edge IO Connector (MCIO3)
25	Socket E2 (LGA4710) (CPU1)
26	4 DDR5 DIMM Slots (P1_DDR5_A2/B2/C2/D2)
27	4 DDR5 DIMM Slots (P1_DDR5_A1/B1/C1/D1)
28	Mini Cool Edge IO Connector (MCIO1)
29	Mini Cool Edge IO Connector (MCIO2)
30	Mini Cool Edge IO Connector (MCIO10)
31	Backplane PCI Express Hot-Plug Connector (CPU1_HSBP1)
32	ATX 12V Power Connector (ATX12V4)
33	Mini Cool Edge IO Connector (MCIO9)
34	ATX 12V Power Connector (ATX12V3)

No.	Description
35	System Fan Header (FAN1)
36	Clear CMOS Pad (CLRMOS1)
37	Rear Panel LAN LED (RL_LED1)
38	Auxiliary Panel Header (AUX_PANEL1)
39	System Panel Header (PANEL1)
40	Non Maskable Interrupt Button (NMI_BTN1)
41	Virtual RAID On CPU Header (RAID_1)
42	Front Panel Board Connector (MGX_FPB1)
43	Front Panel Board Connector (MGX_FPB2)
44	PWM Configuration Header (PWM_CFG1)
45	Mini Cool Edge IO Connector (MCIO7)
46	Mini Cool Edge IO Connector (MCIO8)
47	SPI TPM Header (TPM1)
48	Mini Cool Edge IO Connector (MCIO19)
49	Mini Cool Edge IO Connector (MCIO20)
50	M.2 Socket (M2_2) (Type 2280)
51	BIOS Selection Jumper (BIOS_SW1)
52	PCIE Signal Source Selection Jumper (PCIE_BCM_SEL1)
53	Datacenter-ready Secure Control Module Slot (DCSCM1)
54	M.2 Socket (M2_1) (Type 2280)
55	Network Controller Sideband Interface Header (MGX_NCSI1)
56	Power Distribution Board Header (MGX_PDB1)
57	I/O Card Connector (J97)
58	NCSI Mode Jumper (NCSI_SEL1)
59	System Fan Header (FAN2)
60	BMC SMBus Header (BMC_SMB3)
61	Intelligent Platform Management Bus Header (IPMB1)
62	BMC SMBus Header (BMC_SMB2)
63	BMC SMBus Header (BMC_SMB1)

4.2 Block Diagram

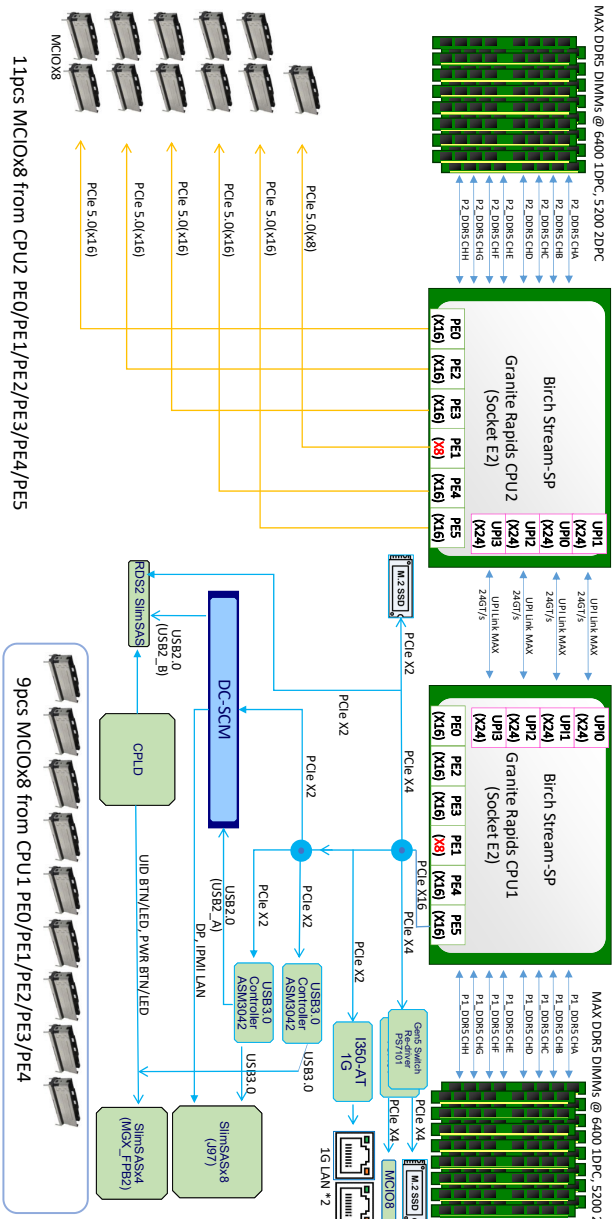

English

4.3 Installing the CPU and Heatsink

1. *Unplug all power cables before installing the CPU.*
2. *Illustration in this documentation are examples only.*

Carrier Used

Carrier Type	Xeon® SP XCC	Xeon® SP HCC/LCC/HDCC
Carrier Code	E2A	E2B
Shim	No	Yes
Carrier Height	16.70mm	17.55mm

XCC Carrier

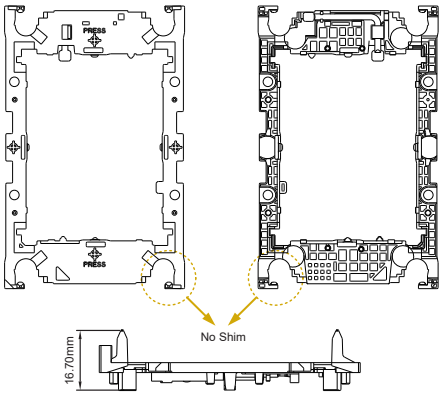

HCC/LCC/HDCC Carrier

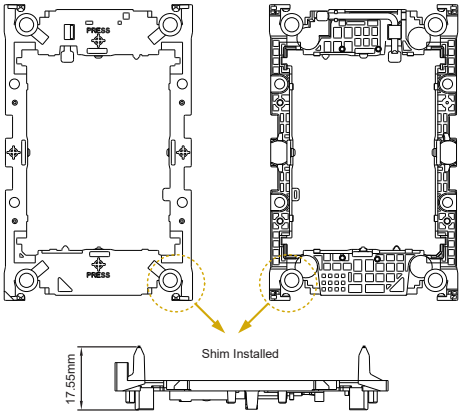

English

1. *Before inserting the CPU into the socket, please check if the PnP cap is on the socket, if the CPU surface is unclean, or if there are any bent pins in the socket. Do not force to insert the CPU into the socket if above situation is found. Otherwise, the CPU will be seriously damaged.*
2. *Unplug all power cables before installing the CPU.*

1

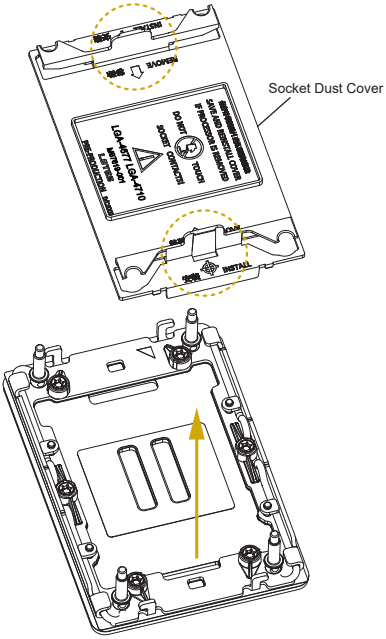

2

Installing CPU:
Align the Pin1 mark to install the CPU

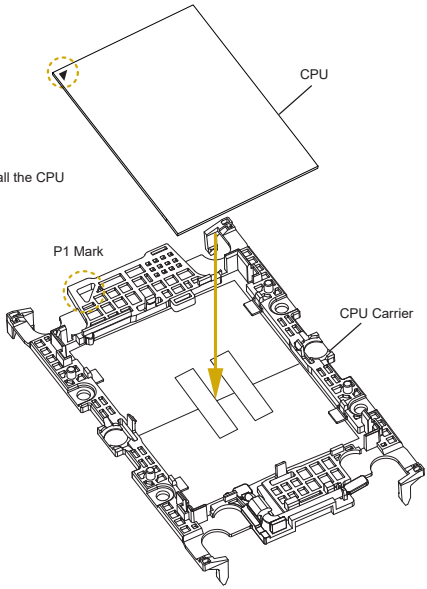

Removing CPU:
Press the lever to remove the CPU

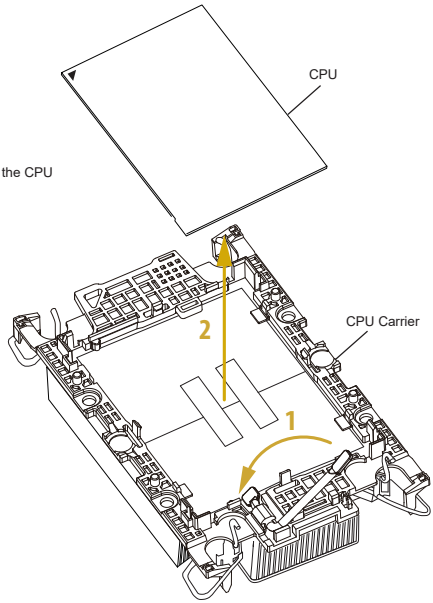

3

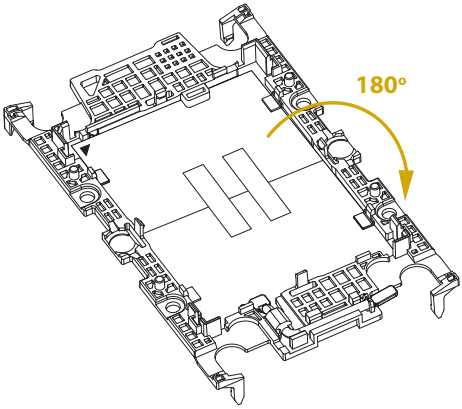

4

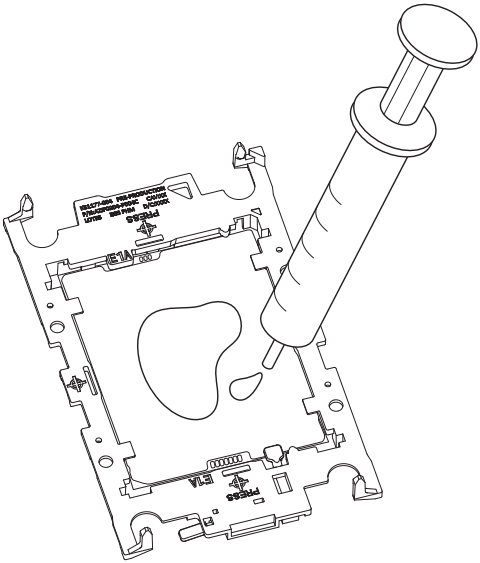

English

5

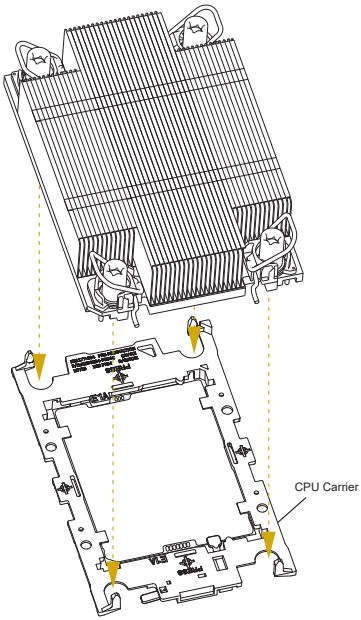

6

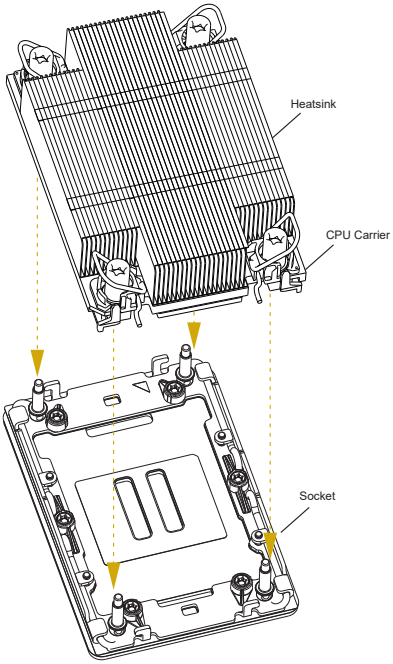

7

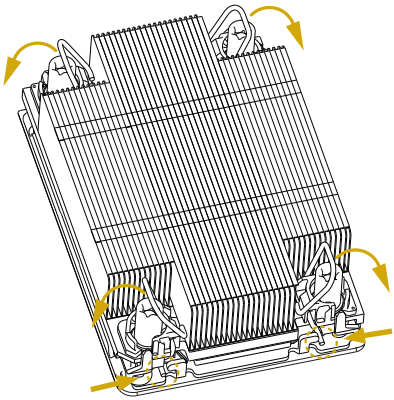

8

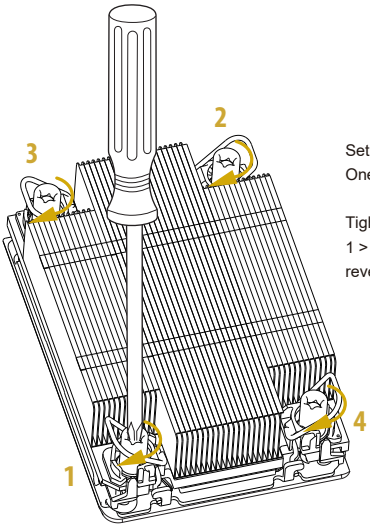

Set the torque wrench to 6-12 in-lb.
One fourth a turn each time.

Tighten the screws in a sequential order 1 > 2 > 3 > 4. Loosen the screws in a reverse order.

4.4 Installing the Memory Modules (DIMM)

The DIMM only fits in one correct orientation. It will cause permanent damage to the server motherboard and the DIMM if forcing the DIMM into the slot at incorrect orientation. For more information about DIMM installation, refer to the server motherboard user manual.

1

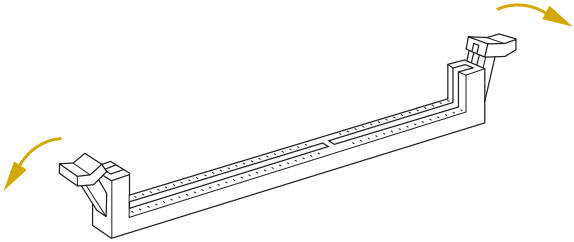

2

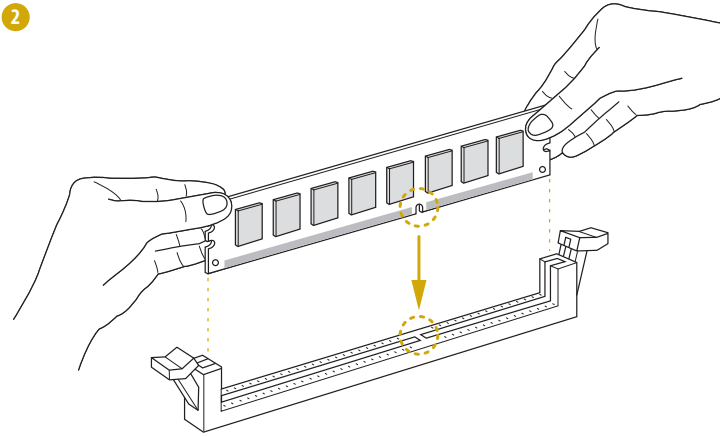

3

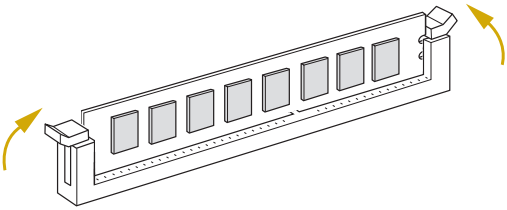

Appendix

Installing the Server in a Rack

This section describes how to rackmount the server with slide rail assembly.

The rails installation instructions in this manual are example only. The actual rail assembly procedure may differ slightly.

The rail assembly consists of outer, middle and inner rail.

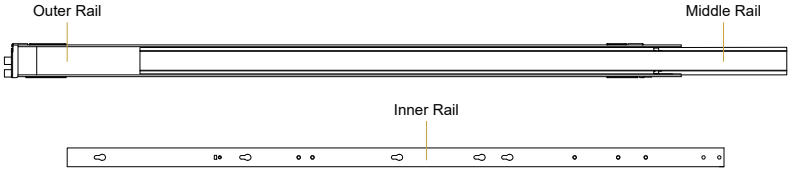

Some slide rails are labeled with either L or R, please identify prior to rail installation. Install the rail labeled with L on the left side of rack, and the rail labeled with R on the right side.

1. Remove the inner rail.

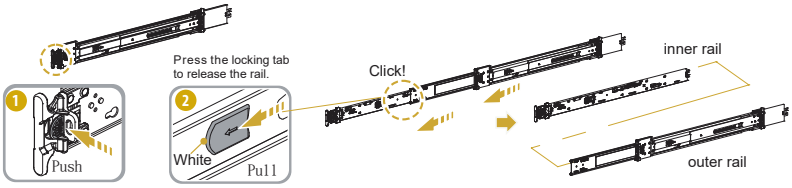

2. Rotate the latch (a) and slide middle rail back.

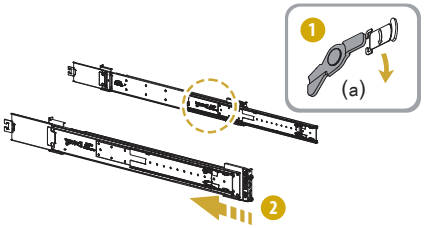

3. Install the inner rail onto the chassis. (This rail kit can be installed forward and reversely.)

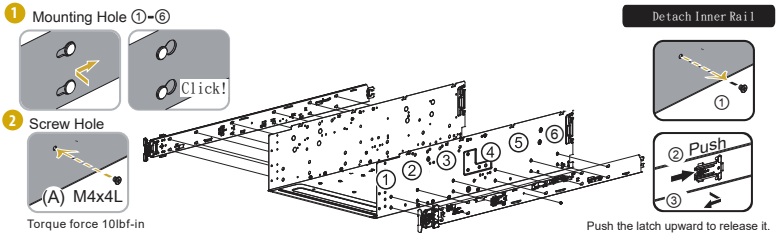

4. Mount the outer rail/bracket assembly to the rack post.

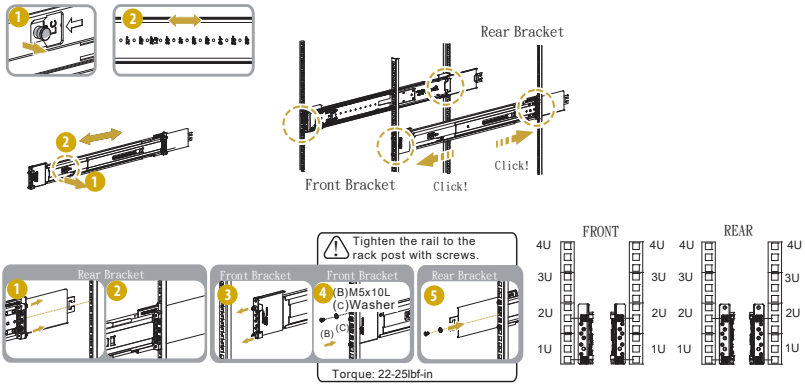

English

5. Insert the chassis to complete the installation.

❶❷ Extend the middle rail to the locked position and ensure that the ball bearing retainer is at the front.
❸ Using a server lift to install. Align inner rail to middle-outer rail, keep chassis horizontally when inserting.
❹ When the rail hit the stop, press the blue release tab to unlock it.

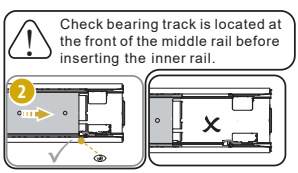

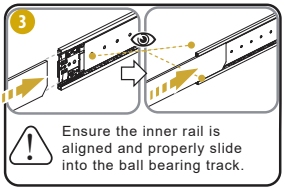

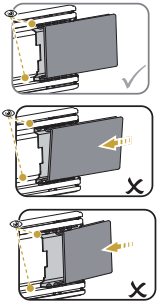

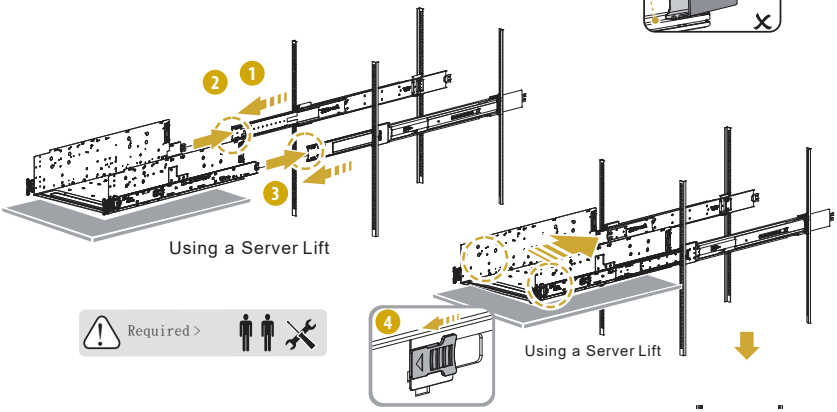

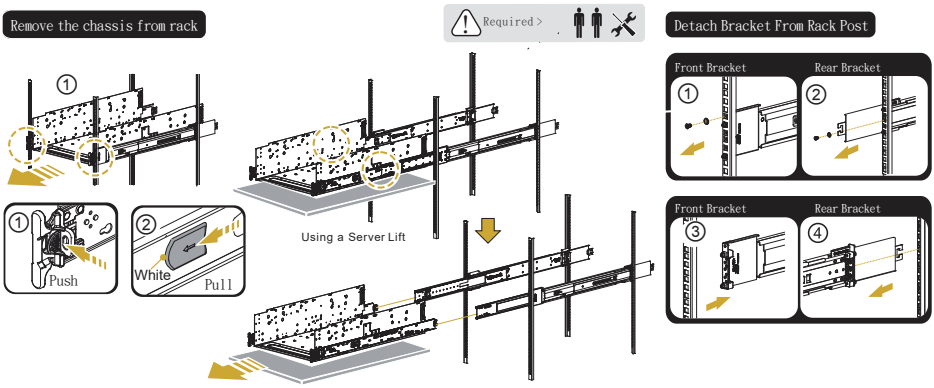

Contact Information

Contact ASRock Rack or want to know more about ASRock Rack, you're welcome to visit ASRock Rack's website at http://www.asrockrack.com; or contact the dealer for further information. For technical questions, please submit a support request form at https://event.asrockrack.com/tsd.asp

ASRock Rack Incorporation

e-mail: ASRockRack_sales@asrockrack.com

ASRock Rack EUROPE B.V.

Bijsterhuizen 11-11
6546 AR Nijmegen
The Netherlands
Phone: +31-24-345-44-33

ASRock Rack America, Inc.

4331 Eucalyptus Ave, Chino, CA 91710 U.S.A.
Phone: +1-909-590-8308
Fax: +1-909-590-1026